TECHNICAL SERVICE BULLETIN

ADAIR Auto Air Products

HOLDEN TS ASTRA AND ZAFIRA COOLING FAN OPERATION AND A/C COMPRESSOR ACTIVATION	TSB #:	54
	Date:	9/11/2011

Initial Once Read:						

A cooling module located under the Passenger side guard is used to control the radiator fan, condenser fan and the compressor clutch activation. This cooling module receives information from various areas such as the ignition switch, A/C request signal, high side A/C system pressure, coolant temperature and engine RPM. From the information received the module will operate the engine and condenser fans in four different mode types.

The cooling module has a internal diagnostic system that will turn on the instrument panel A/C / radiator warning lamp if a problem is detected. An "emergency fan activation mode" is also used in the case of an issue with the module or sensors. An appropriate scan tool can be used to read and clear any DTC's relating to this module.

The major issue with the cooling module is moisture entry owing to the location under the guard. The moisture will cause internal damage to the module and the fans will operate in "emergency fan activation" mode.

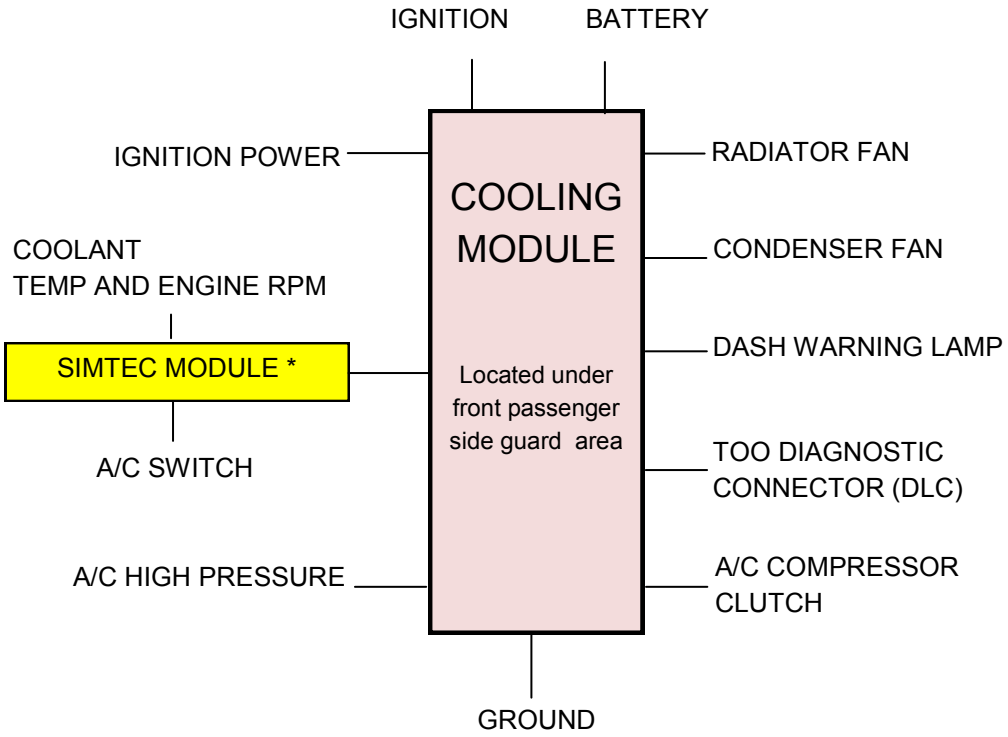

* The SIMTEC (by Seimens) module is actually the engine ECU (electronic control unit) and is attached to the side of the engine block. The SIMTEC module monitors a number of sensor inputs such as engine rpm, coolant temperature and A/C switch activation. The SIMTEC module then activates or deactivates the cooling module to engage or disengage the compressor and activate the four different cooling fan strategies depending on the sensor inputs.

As the SIMTEC module is attached to the engine block it is subject to large temperature changes and vibrations which could lead to an internal circuit or even a terminal connector failure. A tell tale sign that an issue may exist with the SIMTEC module is that a warning lamp in the dash is illuminated and is also normally associated

ASTRA / ZAFIRA COOLING FAN ISSUES

◊ Cooling Fans Stay On—Both or one fan stay on after ignition is turned off. Water in cooling module. Fans come on even when engine is cold, faulty A/C pressure transducer.

◊ Missing Cooling Fan Speeds—Check resistor pack on the radiator fan. Possible broken resistance wire.

◊ Fans Not Operating—Relay fault, highest fan speed Black relay (DTC P1481) in engine bay and low and medium speeds White relays (P1482 / P1483). 40 amp fuse in engine bay. Fuse 11 in fuse box. Faulty ECU, no earth circuit for relay. Faulty ignition switch or A/C switch.

Dash warning lamp to indicate cooling fan fault

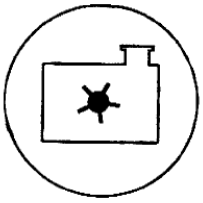

FAN ACTIVATION AND CUT OFF VIA TEMPERATURE AND A/C PRESSURE

FAN SPEED ACTIVATION VIA COOLANT TEMPERATURE		
FAN	**ON**	**OFF**
NO FAN OPERATION	LESS THAN 100°C	
SPEED 1-BOTH FANS IN SERIES	100°C	LESS THAN 95°C
SPEED 2-BOTH FANS IN PARALLEL VIA RESISTORS	GREATER THAN 105°C	LESS THAN 105°C
SPEED 3-CONDENSER FAN HAS BATTERY VOLTAGE. RADIATOR FAN VIA RESISTOR	N/A	N/A
SPEED 4-BOTH FANS IN PARALLEL HAVE BATTERY VOLTAGE	GREATER THAN 110°C	LESS THAN 105°C

FAN SPEED ACTIVATION VIA A/C PRESSURE (IN kPa)		
FAN	**ON**	**OFF**
SPEED-1 BOTH FANS IN SERIES	GREATER THAN 1200	LESS THAN 900
SPEED-2 BOTH FANS IN PARALLEL VIA RESISTORS	GREATER THAN 1700	LESS THAN 1400
SPEED 3-CONDENSER FAN HAS BATTERY VOLTAGE. RADIATOR FAN VIA RESISTOR	GREATER THAN 2100	LESS THAN 1800
SPEED-4 BOTH FANS IN PARALLEL HAVE BATTERY	GREATER THAN 3000	LESS THAN 2300

A/C COMPRESSOR ACTIVATION DESCRIPTION

When the A/C Switch is activated battery voltage is sent to the SIMTEC module (engine ECU) terminal A11. The A/C compressor is commanded ON, the engine idle speed is then increased to compensate for the extra load of the compressor activation. The SIMTEC module switches, terminal A51 to zero volts, this signal is then applied to the cooling module which inturn activates the compressor clutch. The cooling fan is also activated on low speed until a temperature or pressure increase occurs.

A/C COMPRESSOR ACTIVATION ISSUES

- ◊ Faulty pressure transducer.
- ◊ Compressor magnetic coil open circuit.
- ◊ Faulty compressor clutch relay.
- ◊ Cooling module faulty.
- ◊ Refrigerant quantity not to specification.
- ◊ Engine idle too low, below 600 rpm.
- ◊ Faulty coolant temperature switch.
- ◊ Condenser fan not operating.
- ◊ Restriction or blockage in A/C system circuit.
- ◊ Engine overheating through faulty thermostat, radiator or coolant leak.

COMPRESSOR ACTIVATION AND CUTOFF VIA A/C		
COMPRESSOR	**ON**	**OFF**
PRESSURE VALUES IN kPa	GREATER THAN 215	LESS THAN 180
PRESSURE VALUES IN kPa	LESS THAN 3000	GREATER THAN 2300

IMPORTANT NOTE:

To improve your diagnostic time, when a problem exists in the A/C or cooling fan circuit it is wise to use a scan tool that has the latest level of programming, capable of detecting DTC's and also of operating components direct from the scan tool. Extreme care must be taken if carrying out voltage probing or "jumping" circuits otherwise damage to the vehicle ECU's and modules will occur.